Electron Light Output and Proton Light Output in an NE-213 Liquid Scintillator

J. R. CHEN (陳俊榮)*, L. J. YUAN (袁立基)**,
W. S. Hsu (徐武雄)*** and Y. C. LIU (劉遠中)
National Tsing Hua University
Hsinchu. Taiwan 300

(Received 4, June 1982)

The coincidence methods were used to measure the electron light output and the proton light output in a 2 in.×2 in. NE-213 liquid scintillator. The results indicated that the electron light output was extremely linear with respect to the electron energy in the range from 0.48 MeV to 3.4 MeV, and that the half-height of the Compton edge was 4.8± 1.8% higher than the maximum Compton electron energy. Of the same light output, the electron energy (E, in MeV) versus the proton energy (E_p in MeV) u-as fitted by least squares fitting of the experimental data to $E_e=0.76906-0.51730\,E_p+0.23780\,E_p^2-0.01621\,E_p^3$, for proton energy ranging from 1.95 MeV to 6.3 MeV. The half-height of the raw spectrum edge was about the maximum recoil proton energy within the experimental error.

1. INTRODUCTION

THE NE-213 liguid scintillation detector has the property of giving different time responses to the electron and to the proton. Therefore, it has been widely used in the fast neutron measurements for the ability to distinguish the signals that are induced by neutrons or by gamma rays.

The electron light output and the proton light output are important data for spectrum unfolding. The pulse height-energy relationship for electrons in the energy range from 0.022 to 1 MeV was investigated by Flynn *et al.*[1] using internal conversion electron sources dissolved in a 3 cm× 3 cm liquid scintillator. The results showed that the half-height of the Compton edge was 4±1% above the maximum Compton electron energy. In 1971, Knox and Miller[2] used two 2 in.×2½ in. NE-213 scintillators for the coincidence measurement, in the energy range from the 0.3 to 1 MeV, results indicated that the half-height energy was not a simple multiple of the maximum Compton electron energy but changed with energy. The mean value was 11.7± 3.5% above the maximum Compton electron energy.

Futhermore, there exists no well defined experimental data for the proton light output measurement in the NE-213 liquid scintillator. Hence, several previous inverstigators[3,4] assumed that the half-height of the spectrum edge was the maximum recoil proton energy in their experiments. In 1950's, Chagnon *et al.*[5,6] and Draper[7] had discussed the coincidence spectrometer based on the

* Department of Nuclear Engineering.
** Institute of Nuclear Science.
*** Department of Physics.

(1) K. F. Flynn, L. E. Glendenin, E. P. Steinberg and P. M. Wright, Nucl. Inst. and Meth. 27 (1964) 13.
(2) H. H. Knox and T. G. Miller, Nucl. Inst. and Meth. **101** (1972) 519.
(3) H. W. Broek and C. E. Anderson, Rev. Sci. Inst. 31 (1960) 1063.
(4) V. V. Verbinski, W. R. Burrus, T. A. Love, W. Zobel and N. W. Hill, Nucl. Inst. and Meth. 65 (1968) 8.
(5) Paul R. Chagnon, Leon Madansky and George E. Owen, Rev. Sci. Inst. 2-l (1953) 656.
(6) Paul R. Chagnon, George E. Owen and Leon Madansky, Rev. Sci. Inst. 26 (195.5) 1165.
(7) J. E. Draper, Rev. Sci. Inst. 25 (1953) 558.

elastic neutron scattering. They indicated that there were some difficulties, for example, the efficiency was too low and chance coincidence was too high to limit the usefulness of the coincidence spectrometer. In 1968, Maier and Nitschke[8] measured the proton light output by the coincidence method, they showed encouraging results. However, works done by coincidence measurement were very few yet.

After improving time resolution of our electronics system, the time resolution in this work was less than 5 ns. This gives a high signal to noise ratio, and the proton light output in an NE-213 scintillator were investigated by us using the coincidence method. The results of the electron light output measurement did not agree with the work of Knox and Miller" ' but were close to the work of Flynn et *al.*[1] And the results of the proton light output measurement were used satisfactorily for raw spectrum unfolding.

2. EXPERIMENT

2.1 Electron Light Output

Electron light output in a 2 in.×2 in. NE-213 liquid scintillator were measured by the NaI(Tl)-NE-213 fast-slow coincidence method. The coincidence circuit block diagram is shown in Fig. 1. Gamma-ray source was placed at a distance about 15cm from the NE-213 scintillator along the cylinder axis. A check of the maximum Compton recoil was obtained by placing the NaI(Tl) detector at the opposite side of the NE-213 detector about 30 cm away from the source, so that the gamma-ray is scattered 180° from the NE-213 detector to the NaI(Tl) detector. For measurement, the SCA(I) was set at the range of the Compton scattered gamma-ray energy. Another method used for measuring the electron light output was to place the NaI(Tl) detector at a angle of 130°, in this case the SCA(I) was set at gate of 0.511 MeV so that the coincidence spectrum was just the escape peaks. In Fig. 1, the TPHC(III) and SCA(III) were used for neutron-gamma pulse shape discrimination.

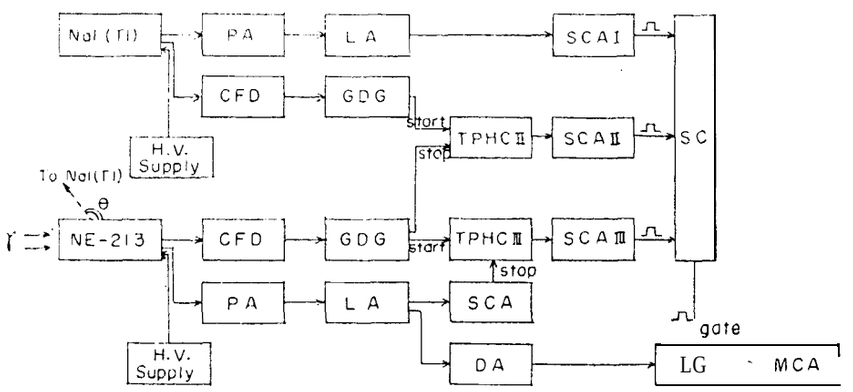

Fig. 1. Coincidence circuit block diagram for electron light output measurement.

2.2 Proton Light Output

The neutron sources for proton light output measurements were generated by $^{9}Be(\alpha, n)\,^{12}C$ and $D(d,n)\,^{3}He$ reactions by using a 3 MV Van de Graaff accelerator. The experimental arrangement of the target, paraffin shieldings, and detectors is shown in Fig. 2. The coincidence circuit block diagram is shown in Fig. 3. The coincidence spectrum was measured when the incident neutron hit the first detector and the scattered neutron was detected by the second detector at an angle θ. The distance between the two detectors was 40 cm.

(8) K. H. Maier and J. Nitschke, Nucl. Inst. and Meth. 59 (1968) 227.

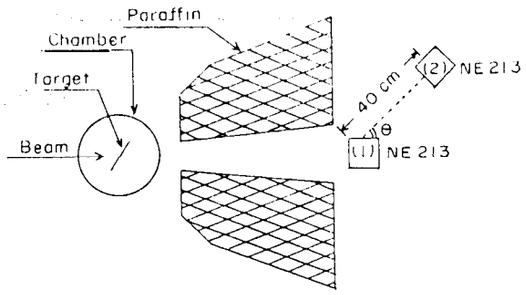

Fig. 2. Arrangement of target, paraffin and detectors for proton light output measurement.

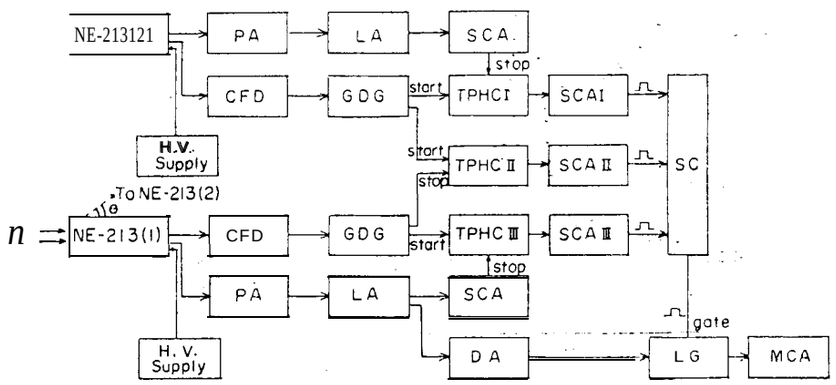

Fig. 3. Coincidence circuit block diagram for proton light output measurement.

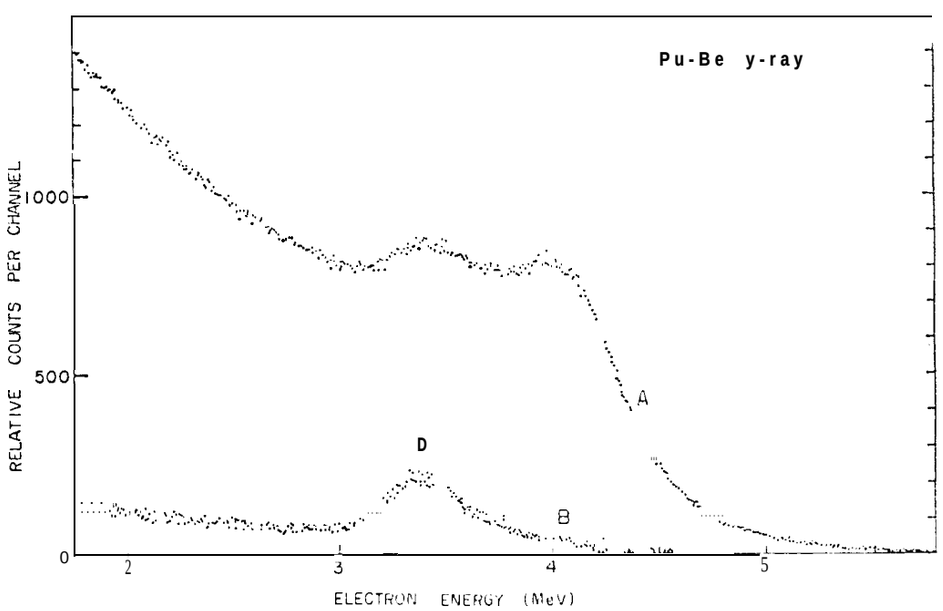

Fig. 4. Annihilation escape spectrum of 4.39 MeV γ-ray from ^{239}Pu-Be source. A is single spectrum, and B is coincidence spectrum. D is the double escape peak of the 4.39 MeV T-ray.

3. RESULTS AND DISCUSSIONS

3.1 Electron Light Output

Typical coincidence' spectra of the electron light output measurements are shown in Fig. 4 to Fig. 6. Fig. 4 shows the annihilation escape spectrum of the 4.39 MeV gamma-ray from a ^{239}Pu-Be source. Spectrum A and spectrum B are single spectrum and coincidence spectrum, respectively. In the spectrum B there is a peak D referred to as the double escape peak. The single escape peak in the spectrum was not found, the reason may be due to low atomic number and low density of the liquid scintillator so that the probability of the single escape is much lower than that of the double event. Fig. 5 shows the recoil electron spectrum for ^{24}Na source at a scattering angle

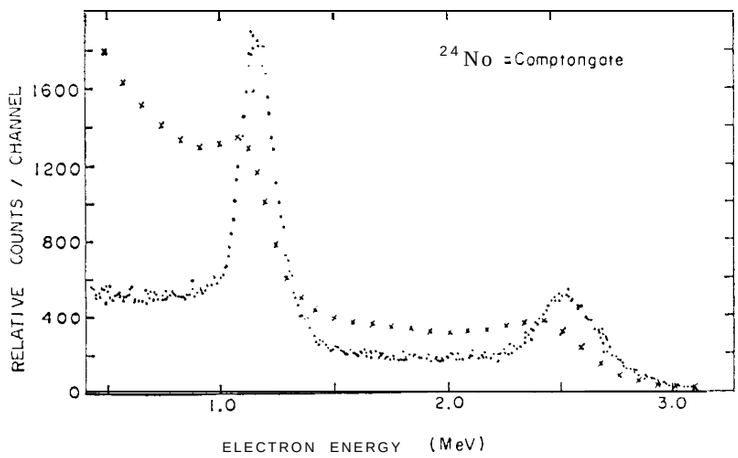

Fig. 5. The recoil spectrum of ^{24}Na γ-ray at a scattering angle of 180°. The cross curve is single spectrum, and the dotted curve is coincidence spectrum.

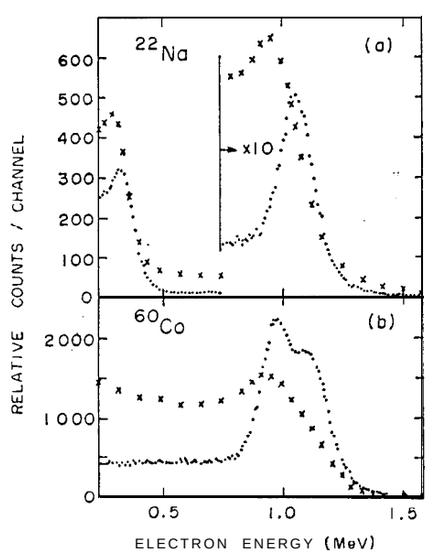

Fig. 6. Single spectrum (×) and coincidence spectrum (•) of (a), ^{22}Na l-ray. and of (b), ^{60}Co r-ray. The two peaks of the coincidence spectrum in(b) are not resolved.

Table 1. Energy resolution of the electron light-output

Electron energy (MeV)	0.48	1.06	1.15	1.73	2.52	3.41
Energy resolution (%)	20	14	14	12	11	10

Table 2. Ratio of the half-height energy to the maximum Compton recoil electron energy

Max. recoil energy (MeV)	Half-height energy (MeV)	Ratio
0.341	0.358±0.024	1.05010.078
0.478	0.528±0.028	1.104±0.066
1.062	1.092±0.045	1.028±0.043
1.153	1.218±0.050	1.056±0.044
2.520	2.642±0.086	1.048±0.035
4.19	4.37 ±0.13	1.043±0.032
Average		1.048±0.018

of 180°, a single spectrum for comparison is also shown. Fig. 6.b shows the ^{60}Co spectrum, Fig. 6.a is the ^{22}Na spectrum for comparison with Fig. 6.b. Fig. 6.b shows that the two peaks in the coincidence spectrum is not well resolved.

The energy resolution of the electron light output is listed in Table 1; the higher the electron energy, the better the resolution. Table 2 shows the corresponding electron energy at half-height of the Compton edge. The maximum recoil electron energy is listed in the first column, and the electron energy at half-height of the Compton edge is listed in the second column. The ratio of column two to column one is listed in the third column, which has a mean value of 1.048 ± 0.018. Fig. 7 shows the relationship of electron light output versus energy.

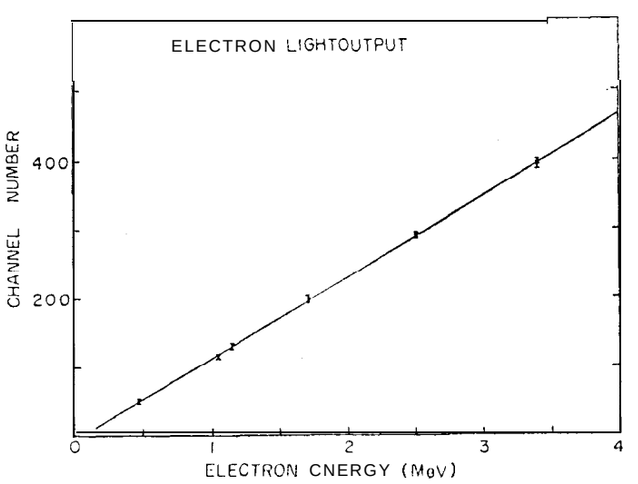

Fig. 7. Electron light output as a function of electron energy.

3.2 Proton Light Output

Typical coincidence spectra of the proton light output measurements are shown in Fig. 8. Fig. 8.a is the single spectrum for E_n=4.65 MeV from the $D(d,n)^3$He reaction. Fig. 8.b and Fig. 8.c shows the coincidence spectrum at scattering angles of 60° and 45°, respectively. Of the same light output, the electron energy (E_e in MeV) versus the proton energy (E_p in MeV) was fitted by least squares fitting of the experimental data to

$$E_e = 0.76906 - 0.51730\ E_p + 0.23780\ E_p^2 - 0.01621\ E_p^3$$

for the effective proton energy from 1.95 MeV to 6.3 MeV. Fig. 9 shows the relationship between the electron light output versus proton light output. Curve B is the fitting polynomial of the experimental data discussed above. The circles indicate the location of half-height of the single spectrum edge that is assumed to be the maximum recoil proton energy. A better relationship derived from the differentiation of the single spectrum, for spectrum unfolding, is shown by curve A[9]

$$E_e = 0.02055 + 0.11932\ E_p + 0.08547\ E_p^2 - 0.00481\ E_p^3$$

for 1.47 MeV $\leq E_p <$ 5 MeV, and

$$E_e = -0.91132 + 0.61327\ E_p$$

for 7.73 MeV $\geq E_p \geq$ 5 MeV.

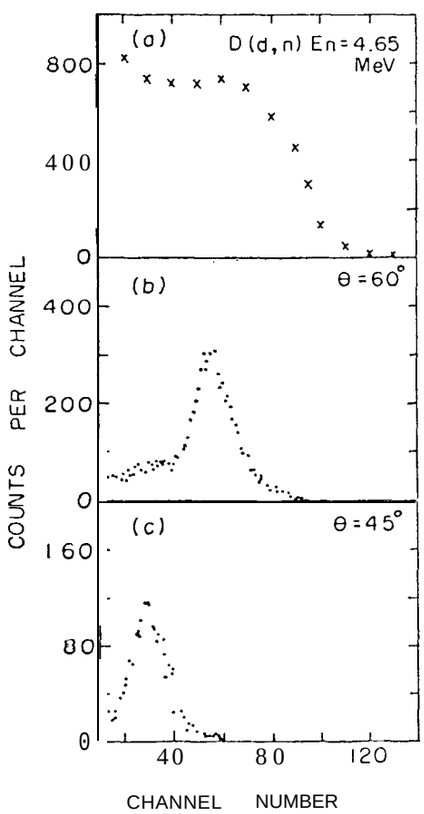

Fig. 8. (a) Single spectrum of 4.65 MeV neutron, (b) coincidence spectrum of 4.65 MeV neutron for scattering angle 60°, (c) coincidence spectrum of 4.65 MeV neutron for scattering angle 45°.

4. CONCLUSIONS

Although the results obtained in this work indicated that the half-height of the Compton edge was 4.8 ± 1.8% higher than the maximum recoil electron energy, there are discrepancies existing between this experiment and those did by others. It may bc due to the different sizes of the

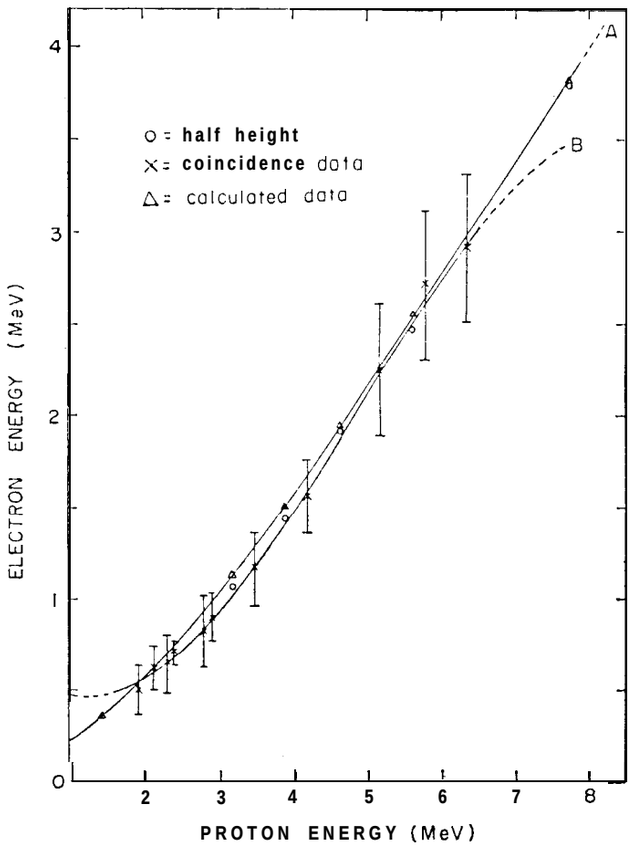

Fig. 9. The curve of electron energy vs. proton energy of the same light output.

scintillators used at each experiment. However, from both the published data taken by Knox and Miller" ' and the data obtained in this work, there is clearly a tendency that the higher the electron energy the better the energy resolution, and the lower the ratio of the half-height energy to the maximum recoil electron energy. From this point of view, the discrepancies between several experiments may be due to the different energy resolution of each system. We suggest an interpretation for this: the worse the energy resolution the more broader the Compton peak, and hance the half-height of the Compton edge shifts to higher channel number. If this interpretation is correct then the half-height of the Compton edge is no longer a good reference point, because it is a function of the energy resolution, and a new approach should be found instead.

By the way, curve A of Fig. 9 is better for the raw spectrum unfolding than curve B[9]. The reason is that there was a large statistical error for the coincidence data, However, our results[9] showed that spectrum unfolding using curve B is also accurate enough, and if the detection efficiency were increased the statistical error would be reduced.

ACKNOWLEDGEMENT

The authors would like to thank Dr. S. H. Jiang. Dr. V. K. C. Cheng and Dr. M. M. King for many discussions and helps in this work.

(9) J. R. Chen, L. J. Yuan, W. S. Hsu and Y. C. Liu, Nucl. Sci. J. 19(2), 81 (1982).